A

IMPERIUM LIGHT

Model : ACCENT

1

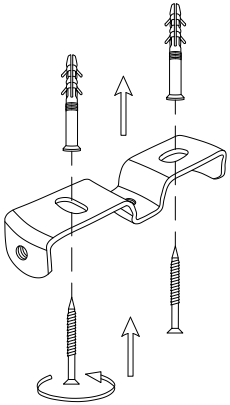

2

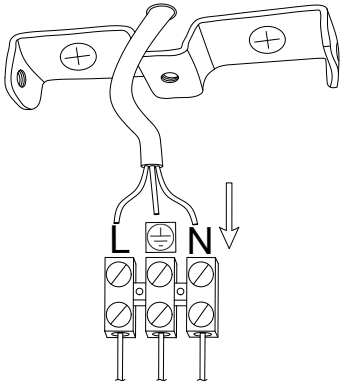

3

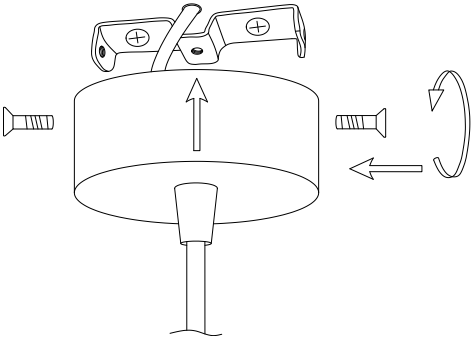

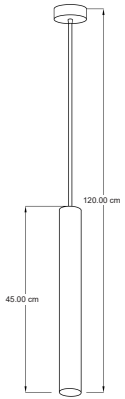

Equipment

Drywall screw	2
Dowel	2